Recorder Flow Pressure Temp Analyzer Level

# Datasheet

# Thermal Mass Flow Meter

# SUP-MF

FACTOCOMPONENTS
INDUSTRIAL SUPPLIES AND MANUFACTURING EQUIPMENT

Supmea®

## Datasheet

# Thermal mass flow meter
# SUP-MF

The thermal mass flow meter is designed based on the principle of thermal diffusion. The instrument uses the constant temperature difference method to accurately measure the gas. It has the advantages of small size, high degree of digitization, convenient installation and accurate measurement.
Reduce your energy costs and increase your sustainability. Monitor your consumption and analyze your leakage flows with just one measuring device.

## Applications

- Compressed air measurement.
- Sewage treatment aeration measurement
- Flue gas emission measurement
- Chimney flue exhaust monitoring

Thermal mass flow meter

## Features

- Without temperature and pressure compensation
- Wide range: 0.5Nm/s～100Nm/s
- Vibration resistance and long service life
- Easy installation and maintenance
- Digital circuit, accurate measurement
- With RS485 communication

FACTOCOMPONENTS INDUSTRIAL SUPPLIES AND MANUFACTURING EQUIPMENT

## Principle

The meter contains two platinum resistance temperature sensors. The thermal principle operates by monitoring the cooling effect of a gas stream as it passes over a heated sensor. Gas flowing through the sensing section passes over two sensors one of which is used conventionally as a temperature sensor, whilst the other is used as a heater. The temperature sensor monitors the actual process values whilst the heater is maintained at a constant differential temperature above this by varying the power consumed by the sensor. The greater the gas velocity, the greater the cooling effect and power required to maintain the differential temperature. The measured heater power is therefore a measure of the gas mass flow rate.

The format of gas velocity and power is shown as below:

$$V = \frac{K\,[Q\ /\triangle\ T\ ]^{1.87}}{\rho_g} \quad \text{.....（1）}$$

Where : $\rho_g$--specific gravity of medium

V--velocity

K--balance coefficient

Q--heater power

ΔT--is differential temperature

The medium temperature range of meter is -40℃～300℃.

In the format (1), the specific gravity of medium is related to the density:

$$\rho_g = \rho_n \times \frac{101.325+P}{101.325} \times \frac{273.15+20}{273.15+T} \quad \text{.....（2）}$$

Where: $\rho_g$---medium density in working condition（kg/m$^3$）

ρn-- medium density in standard condition, 101.325kPa and 20℃ （kg/m$^3$）

P--pressure in working condition（kPa）

T--temperature in working condition （℃）

In the formats ( 1) and (2), there is a certain functional relationship between the velocity and pressure in working condition, medium density,the temperature in working condition.

Due to the sensor temperature is always 30℃ higher than the medium temperature (environment temperature), and the meter adopts method of constant differential temperature, therefore the meter do not

need to do temperature and pressure compensation in principle.

| Parameters | |
|---|---|
| Measuring Medium | Various gases (Except the $C_2H_2$, $BCl_3$, etc) |
| Pipe Size | DN65～ DN1000 |
| Velocity | 0. 1～ 100 Nm/s |
| Accuracy | ±2.5% |
| Working Temperature | Sensor: -40℃ ~ +300℃<br>Transmitter: -20℃ ~ +45℃ |
| Working Pressure | Medium pressure≤ 2.5MPa |
| Power Supply | 24VDC or 220VAC, Power consumption ≥18W |
| Response Time | 1s |
| Output | 4-20mA (optoelectronic isolation, maximum load 500Ω), Pulse, RS485 (optoelectronic isolation) and HART |
| Alarm Output | 1-2 line Relay, Normally Open state, 10A/220V/AC or 5A/30V/DC |
| Sensor Type | Standard Insertion |
| Construction | Compact |
| Pipe Material | Carbon steel, stainless steel, plastic, etc |
| Display | 4 lines LCD: Mass flow, Volume flow in standard condition, Flow totalizer, Date and Time, Working time, and Velocity, etc. |
| Protection Class | IP65 |
| Sensor Housing Material | Stainless steel (316) |

FACTOCOMPONENTS INDUSTRIAL SUPPLIES AND MANUFACTURING EQUIPMENT

## Wiring

### Instruction of sensor wirings

| 1 | 2 | 3 | 4 |
|---|---|---|---|
| RT1 | RT2 | RH1 | RH2 |

Temperature sensor (Pt1000) — Heater (Pt20)

### Terminal description and wiring method

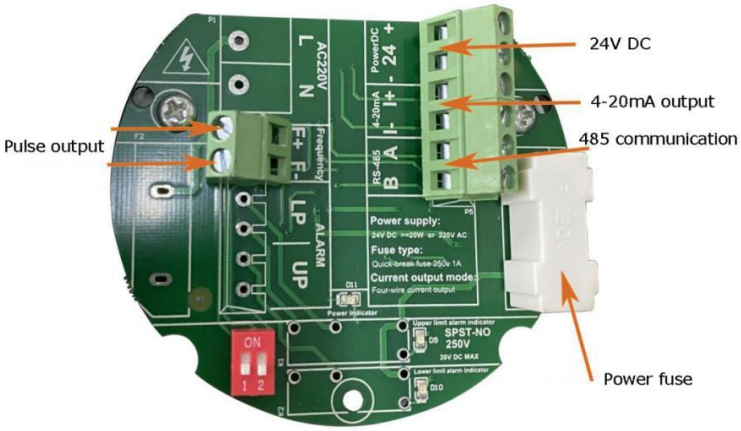


### The power supply connection

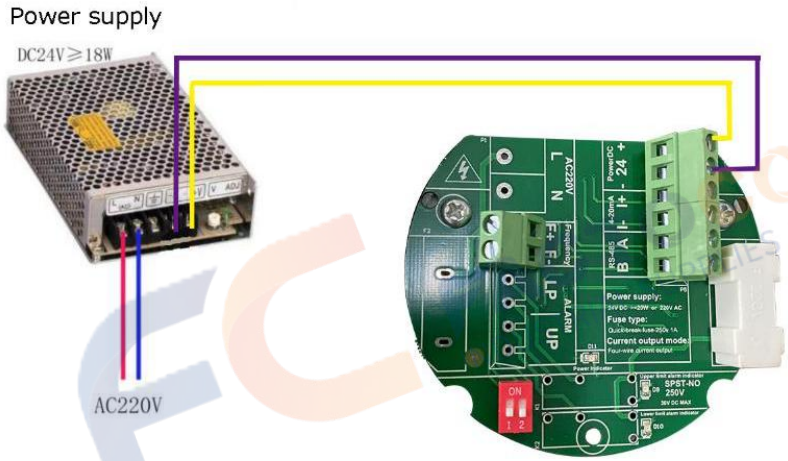


### Flowmeter output wiring

4-wire 4-20mA current output

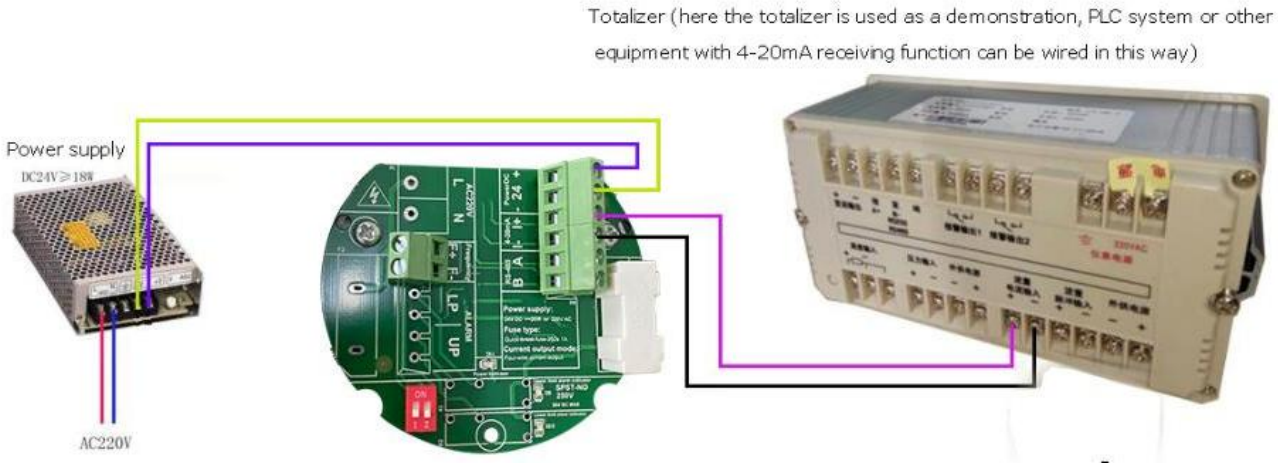

## Dimension

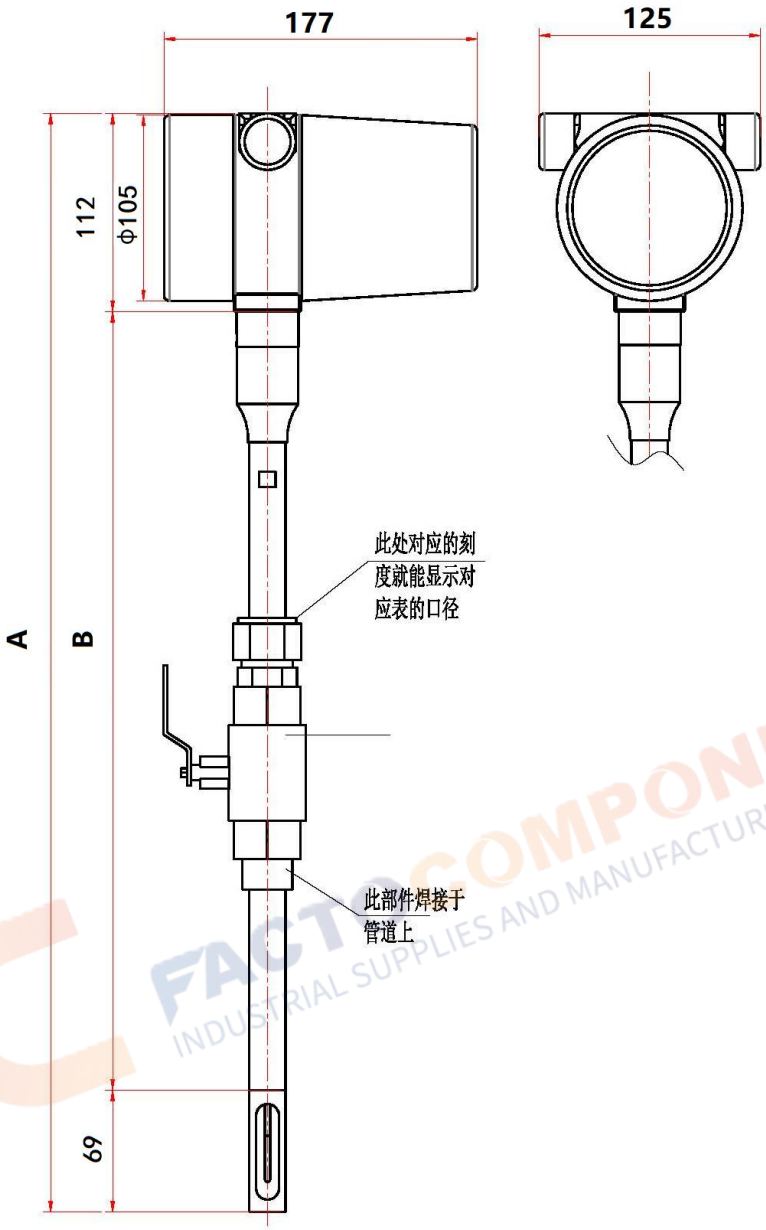


Insertion flow meter (Unit: mm)

| Nominal diamete | A | B |
|---|---|---|
| DN65~DN200 | 431mm | 250mm |
| DN200~DN500 | 551mm | 370mm |
| DN500~DN1000 | 811mm | 630mm |

FACTOCOMPONENTS INDUSTRIAL SUPPLIES AND MANUFACTURING EQUIPMENT

# Installation

## Installation

### Installation Position

- If the instrument is installed outdoors, the instrument sunshade should be added to avoid sunlight and rain.
- Prohibit installation in strong vibration
- It is forbidden to be exposed to an environment containing a large
- amount of corrosive gas.
- Do not share power with frequency converters, electric welders and other devices that pollute the power source. If necessary, install a clean power source for the converter.

### Installation location and requirements for pipeline

When installing the instrument, keep away from elbows, obstacles, variable diameters, and valves to ensure a stable flow field. One side requires a longer upper limit straight pipe, the Inlet run length is greater than 10D, and Outlet run length is greater than 5D. The following figure shows the length of straight pipe required for several situations frequently encountered on site:

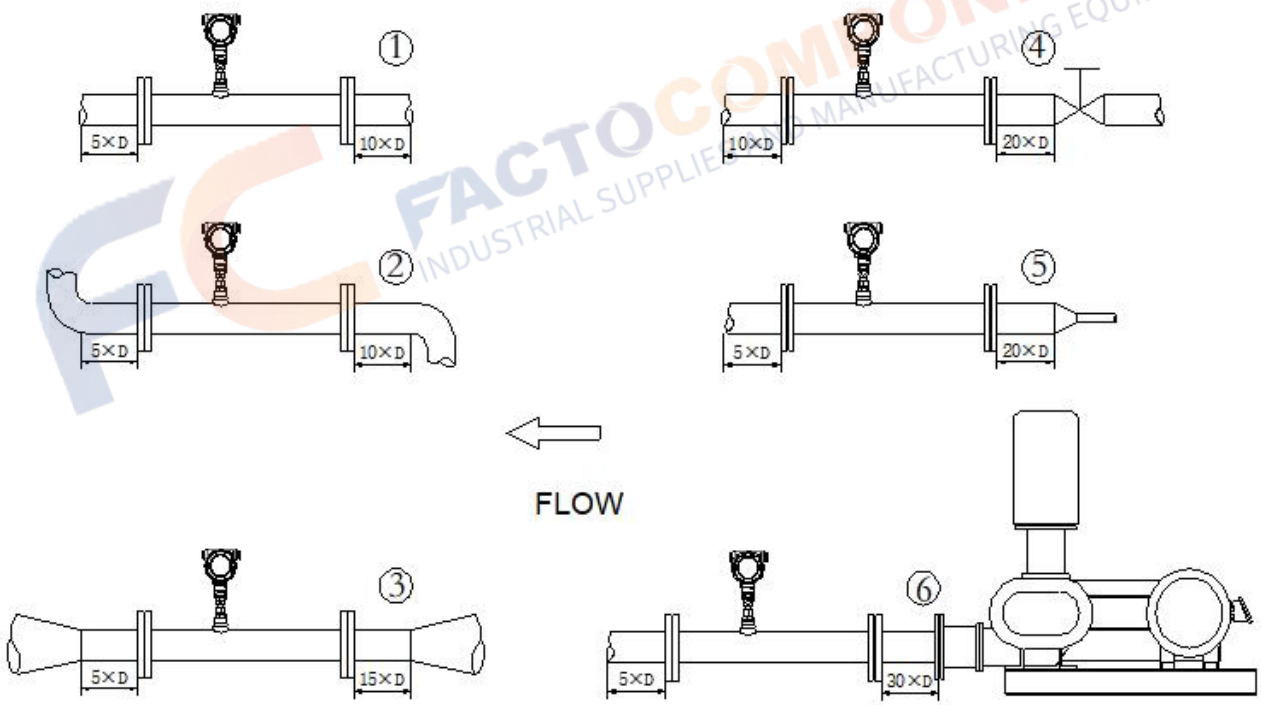


| Pipeline installation type | NO. | Inlet run | Outlet run |
|---|---|---|---|
| Horizontal tube | 1 | 10D | 5D |
| Elbow | 2 | 10D | 5D |
| Expansion tube | 3 | 15D | 5D |

| Pipeline installation type | NO. | Inlet run | Outlet run |
|---|---|---|---|
| Downstream of valve | 4 | 20D | 5D |
| Contractile tube | 5 | 20D | 5D |
| Downstream of pump | 6 | 30D | 5D |

When the on-site requirements for the straight pipe section cannot be met, a gas rectifier can be connected in series to significantly reduce the requirements for the straight pipe section

**Installation steps**

The base of thermal flowmeter

The base of standard insertion type

Note：

No welding in explosive environment Carry out the welding operation in accordance with the requirements of special environment.

When installing, place the base on the top of pipe, and make the through-hole of base be perpendicular to axis of pipe. The good welding location of base and welding process is as below.

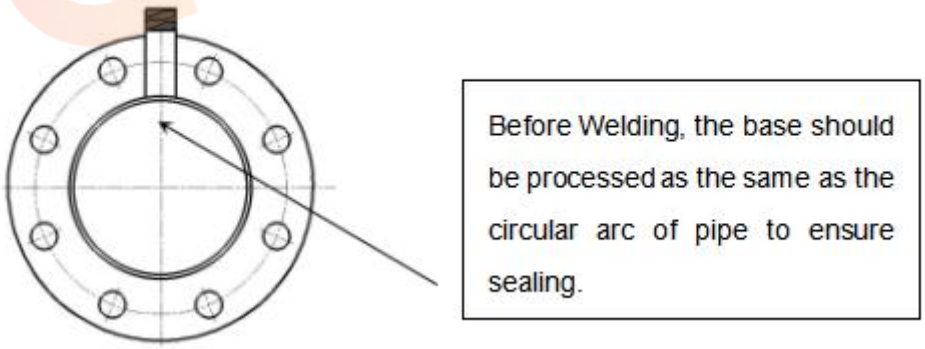


Good welding location of base

1) Please confirm the actual inner diameter and wall thickness of the pipe before installing the plug-in thermal gas mass flowmeter.

2) Put the rest of the thermal gas mass flowmeter into the special ball valve together, and calculate the depth to be inserted according to the actual pipe inner diameter and wall thickness. In this step, you can insert a rough size and tighten the nut by hand.

3) Rotate the sensor connecting rod so that the marked arrow is the same as the flow direction of the medium.

4) Convert the corresponding scale on the sensor connecting rod according to the data measured on the spot, and then tighten the nut.

## Ordering code

| SUP-MF -65-B-P-1-AM-0-M3-WG-TD | | Description |
|---|---|---|
| SUP-MF | | |
| Nominal Diameter | 65 | DN65(2.5") |
| | 80 | DN80(3") |
| | 1C | DN100(4") |
| | 1E | DN125(5") |
| | 1G | DN150(6") |
| | 2C | DN200(8") |
| | 2G | DN250(10") |
| | 3C | DN300(12") |
| | 3G | DN350(14") |
| | 4C | DN400(16") |
| | 4G | DN450(18") |
| | 5C | DN500(20") |
| | 6C | DN600(24") |
| | 7C | DN700(28") |
| | 8C | DN800(32") |
| | 9C | DN900(36") |
| | A0 | DN1000(40") |
| | X | Other |
| Measurement Medium | B | Gas |
| Accuracy | P | 2.5 Class |
| Display Type | 1 | Available |
| Output and Power Supply | AM | 4-20mA+Pulse+RS485，24VDC |
| | AK | 4-20mA+HART+Pulse，24VDC |
| | XX | Other |
| Alarm Output | 0 | None |
| | 1 | Single SPST |
| Mounting Base | 1 | 304SS threaded base + ball valve |
| | 4 | 304SS DN50 PN16 HG/T20592 flange base |
| | 3 | 316LSS threaded base + ball valve |
| | 5 | 304SS DN80 PN16 HG/T20592 flange base |
| | X | Other |
| Sensor Material | M3 | 316LSS |
| | XX | Other |
| Electrical Interface, Housing Material, and Ingress Protection | WG | M20×1.5 Cable Gland, Aluminum Alloy, IP65 |
| | WJ | NPT1/2 Cable Gland, Aluminum Alloy, IP65 |

FACTOCOMPONENTS INDUSTRIAL SUPPLIES AND MANUFACTURING EQUIPMENT

| | | |
|---|---|---|
| Temperature Resistance Grade | TD | -20-150℃ |
| | TE | -20-220℃ |
| | TF | -20-300℃ |

FACTOCOMPONENTS
INDUSTRIAL SUPPLIES AND MANUFACTURING EQUIPMENT