Universal Convertible

NAMUR Solenoid Valve□ 3/2,5/2□

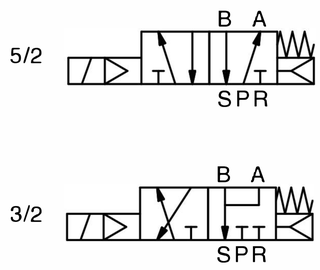

◎ How to Order?

Series No.	Ways	Valve Body Size	Controls	— Port Size	Valve Type	Exhaust Type	ID Code	Voltage	Connection Mode	Cover Color	Valve Color	—Thread Type
V	Universal convertible 3/2 and 5/2	3:3 series	1: Single control	08： 1/4"	M: NAMUR type	R:Outer exhaust G:Inner exhaust	Blank: Standard type A: Amisco coil	E1： AC110V E2： AC220V E3： AC380V E4： DC24V E5： DC12V E6： AC36V E7： AC24V E8： DC110V E9： DC48V E10： DC36V	Blank: DIN connector F: Flying leads	Blank: Brown translucent J: Colorless and translucent	Blank:Black	Blank: G P: PT T: NPT

Order Example:

Universal convertible 3/2 and 5/2 NAMUR solenoid valve, 3 series valve body, single control, port size 1/4",inner exhaust type, standard coil, AC220V,flying leads coil, black color valve, G thread, ERP code is: V523231–08MGE2F

◎ Specifications

Model No.	V523231–08MR	V523231–08MG
Port size	1/4 ❶	
Sectional area(mm^2)	25(CV=1.40)	
Working medium	Clean air(After 40 μ m filteration)	
Acting type	Pilot type	
Flow rate	At 5/2 way: 1830L/min; At 3/2 way: 1090L/min	
Lubrication	Not required	
Working pressure(psi)	21.8~116	
Guaranteed pressure(psi)	174	
Working temperature	–5~60℃（23~140℉)(No freezing)	
Voltage range	–15%~10%	
Power consumption	DC:3.0W ; AC:4.0VA	
Insulation class	Class F	
Protective class	IP65(DIN40050)	
Max. acting frequency	5 Cycles/s	
Activate time(s)	<0.05	
Accessories	1pc D20X16 O - Ring, 1pc position seal plate, 2pcs M5X30 mounting bolts	
Weight(g)	340	460

❶ G、PT、 NPT thread type is optional.

Internal Structure

Single Solenoid Valve

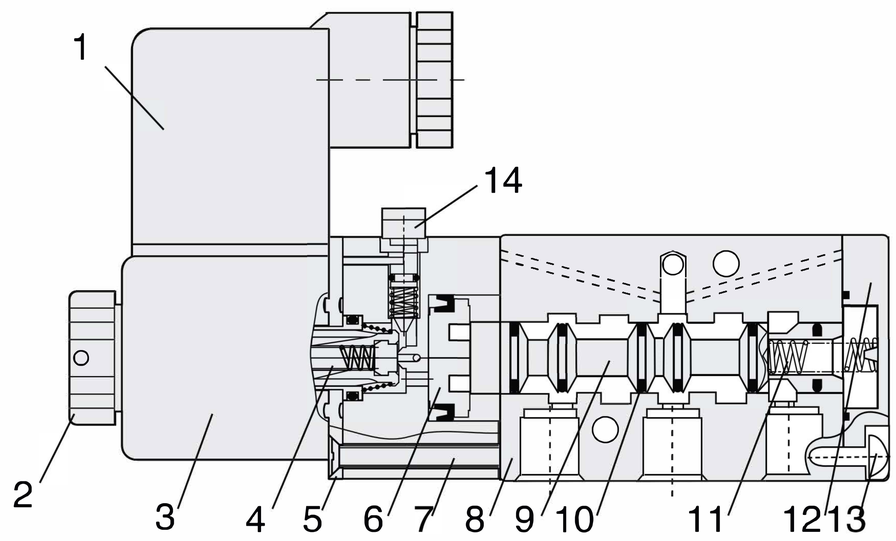

NO.	Part Name	Material
1	Connector	Engineered plastics
2	Nut	POM+Carbon steel
3	Coil	Cu
4	Pilot units	
5	Plate	Carbon steel
6	Piston	POM
7	Screw	Carbon steel
8	Valve body	Aluminum alloy
9	Spool	Aluminum alloy
10	O–ring	HNBR
11	Spring	Stainless steel
12	Rear cover	Zinc alloy
13	Screw	Carbon steel
14	Manual override	Engineered plastics

How to Mount?

2/5 way

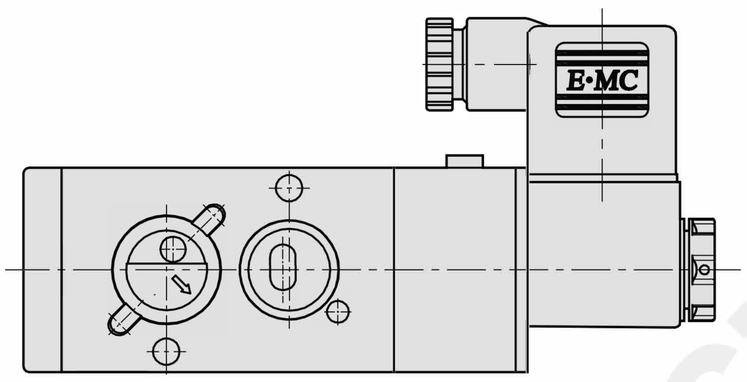

2/3 way

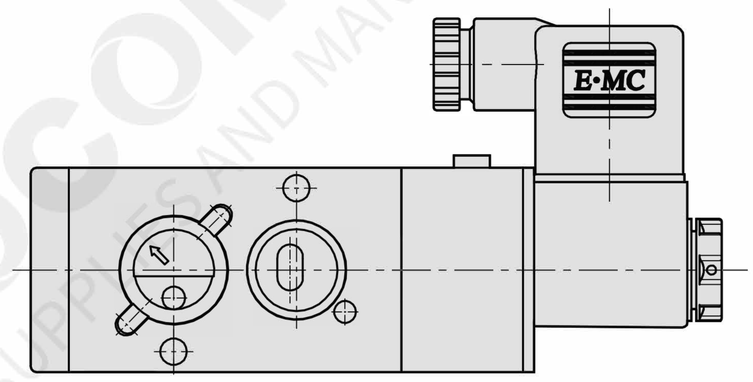

Main Dimension

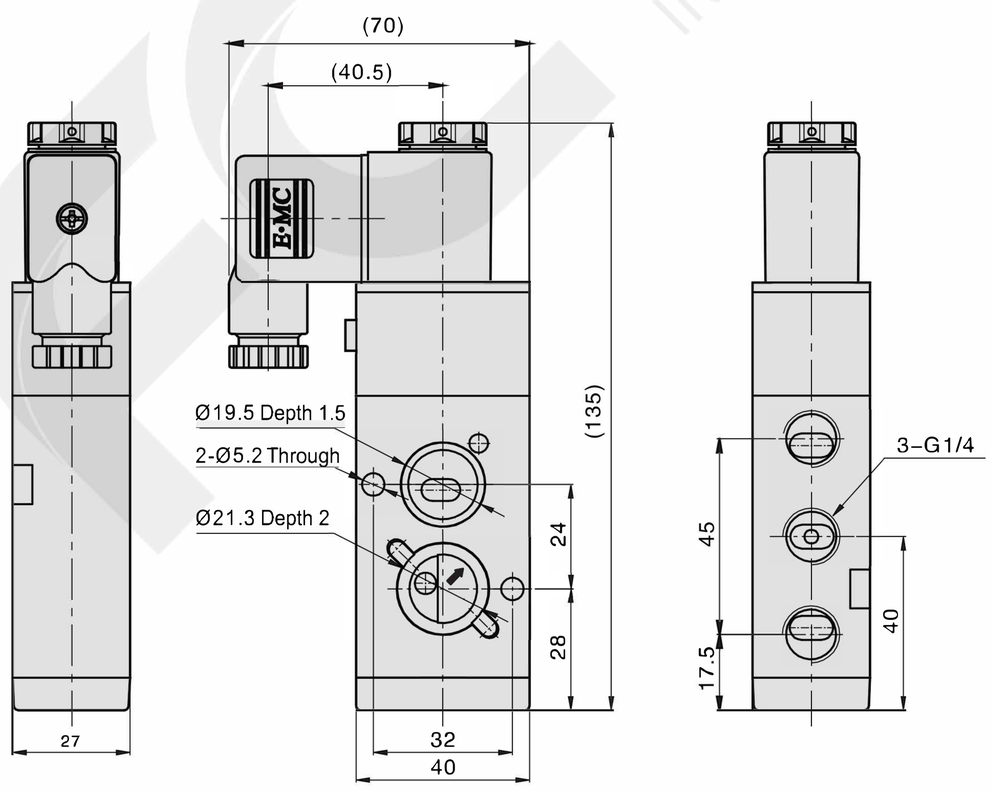

Note:The boundary dimensions of MG series and MR series are same.

FACTOCOMPONENTS
INDUSTRIAL SUPPLIES AND MANUFACTURING EQUIPMENT