V

Standard/Low Power Solenoid Valve (2/2)

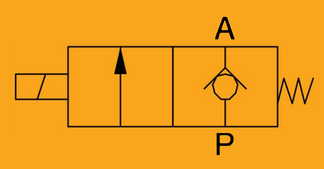

◎ Product Features

* Various voltages and working styles are available.
* Different surface treatment, thread types (G,PT,NPT) are available.

◎ How to Order?

Low Power Solenoid Valve

Series No.	ID Code	Positions	Ways	Controls	—	Port Size	Voltage	Connection Mode	Cover Color	—Patchcord	—	Thread Type
N	M: Standard armature +Engergy saving coil	2 positions	2:2 ways	1: Single control		06：1/8 " 08：1/4 "	E1：AC110V E2：AC220V E4：DC24V	Blank: DIN connector type L: Plug–in Type	Blank: Brown translucent J: Colorless and translucent	Blank:Patchcord length is 0.3 meter 0.6M:Patchcord length is 0.6 meter 1M:Patchcord length is 1 meter (Options for "L:Plug–in type" Only)		Blank: G P: PT T: NPT

Standard Solenoid Valve

Series No.	Positions	Ways	Controls	—	Port Size	Voltage	Connection Mode	Cover Color	—	Patchcord	—	Thread Type
V	2 positions	2:2 ways	1: Single control		06：1/8 " 08：1/4 "		Blank: DIN connector F: Flying leads L: Plug–in Type	Blank: Brown translucent J: Colorless and translucent		Blank:Patchcord length is 0.3 meter 0.6M:Patchcord length is 0.6 meter 1M:Patchcord length is 1 meter (Options for "L:Plug–in type" and "F:Flying leads type" Only)		Blank: G P: PT T: NPT

E1：AC110V	E6：AC36V
E2：AC220V	E7：AC24V
E3：AC380V	E8：DC110V
E4：DC24V	E9：DC48V
E5：DC12V	E10：DC36V

Order Example:

V series directional valve, 2/2 way, single control, 1/8 port size, AC110V, DIN connector, G thread, the ERP code is: V221–06E1

◎ Specifications

Model No.	NM221–06	NM221–08	V221–06	V221–08
Working medium	Air. water. oil			
Acting type	Direct acting			
Orifice (mm)	2			
Port size	1/8	1/4	1/8	1/4
Lubrication	Not required			
Working pressure (MPa)	0~0.8			
Guaranteed pressure (MPa)	1.2			
Working temperature (℃)	–5~60(No freezing)			
Voltage range	–15%－+10%			
Power consumption	DC24V:0.7W AV220V:0.9VA AC110V:1.4VA		AC:4VA DC:3W	
Insulation class	Class F			
Protective class	IP65 (DIN40050)			
Activate time (s)	<0.05			
Seal material	NBR			
Weight (g)	141	138	141	138

Internal Structure

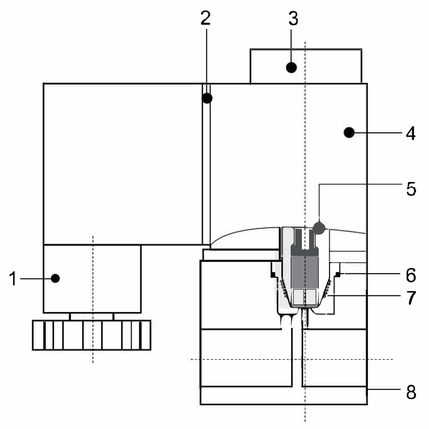

No	Designation
1	Connector
2	Connector washer
3	Nut
4	Coil
5	Pilot units
6	O–ring
7	Spring
8	Valve body

Flow Chat

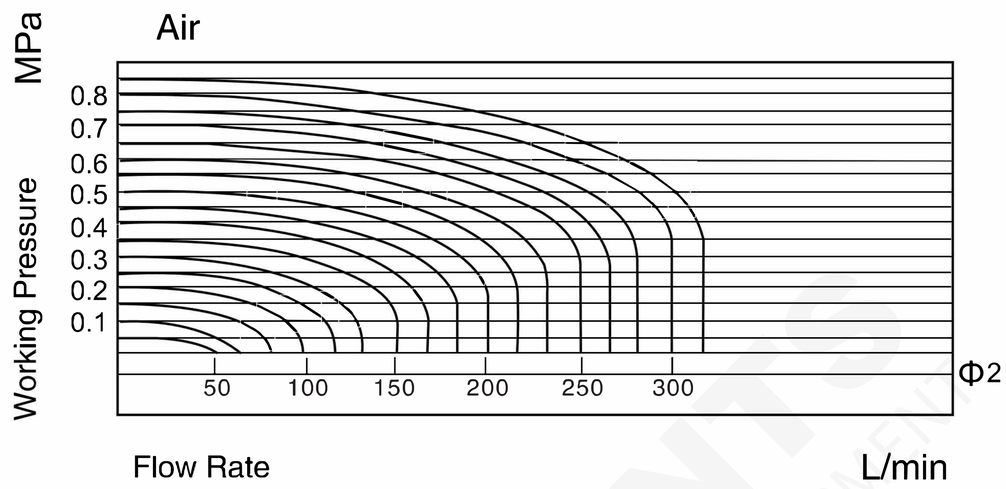

Main Parts Material

Part name	Material
Valve body	Aluminum alloy
Connector	Engineered plastics
Connector washer	NBR (FPM)
Pilot units	Pure steel+Cu+Stainless steel
Diaphragm	NBR
Nut	POM+Carbon steel
Coil	Brass Wire covered with heat resistance colophony

Main Dimension

V221-06/08

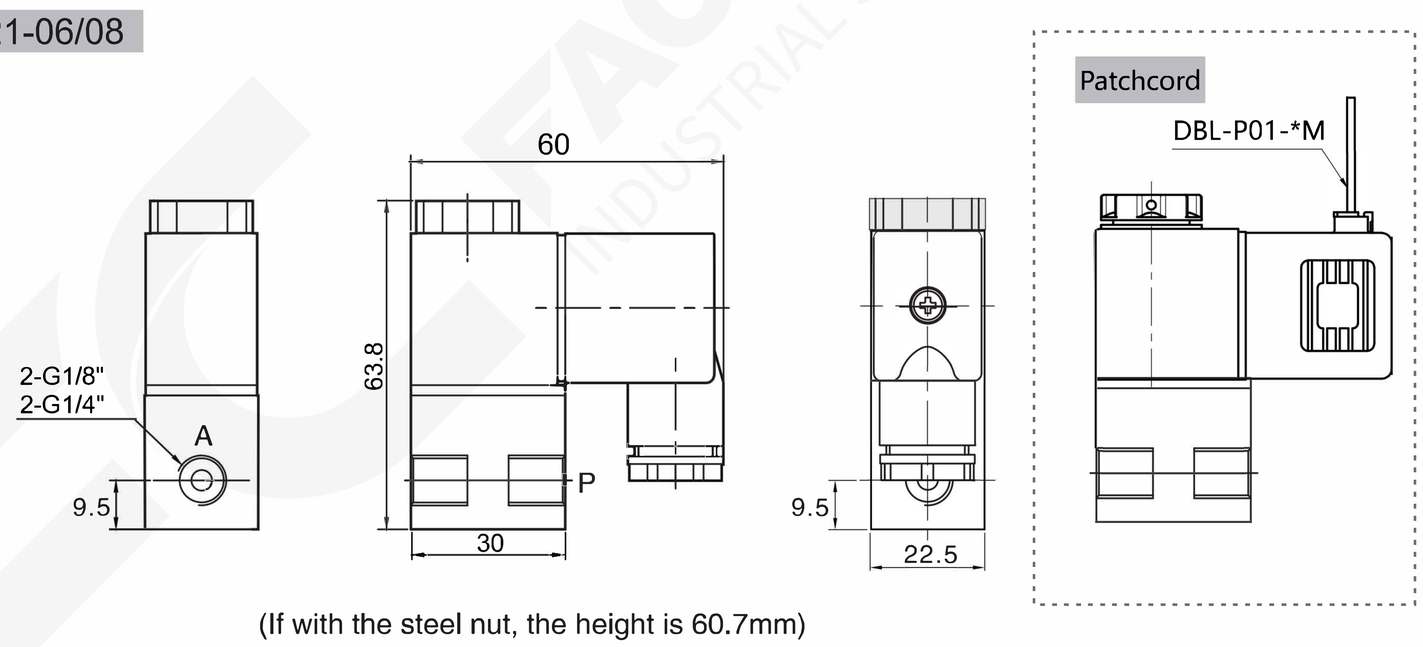

(If with the steel nut, the height is 60.7mm)

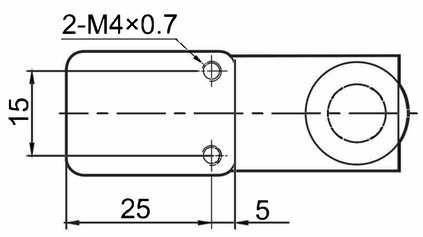

FACTOCOMPONENTS
INDUSTRIAL SUPPLIES AND MANUFACTURING EQUIPMENT